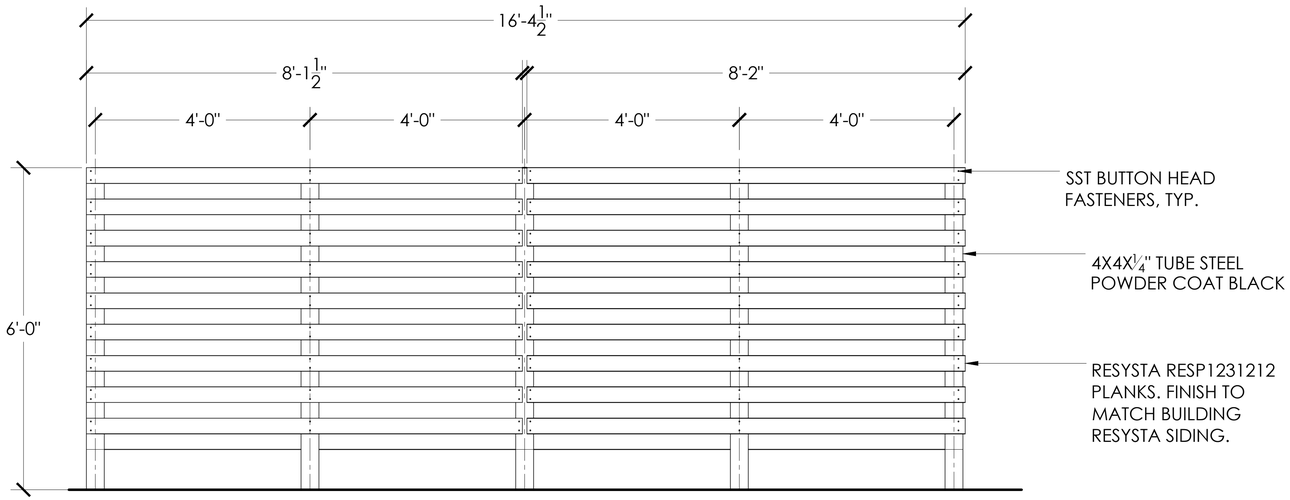

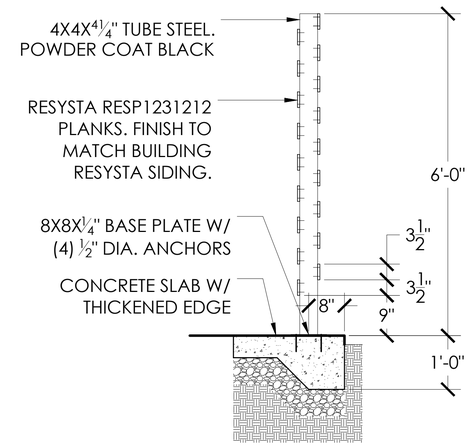

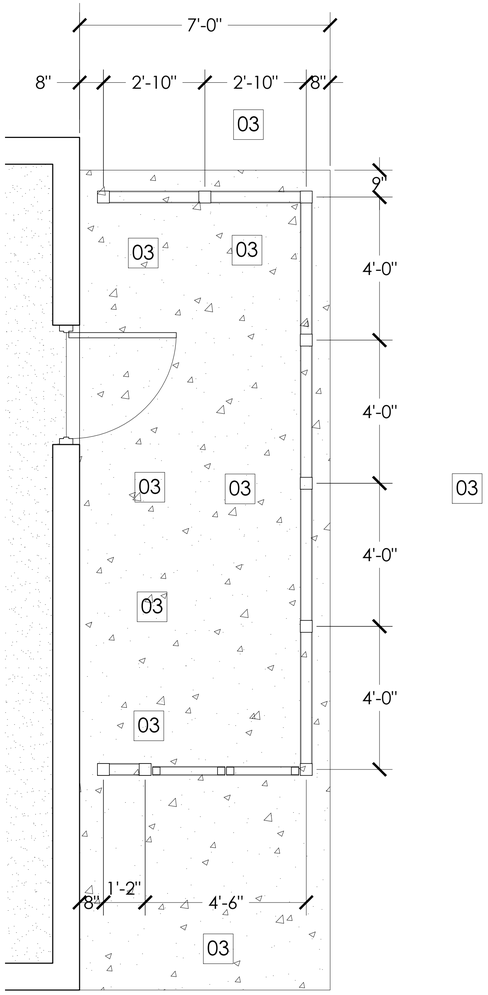

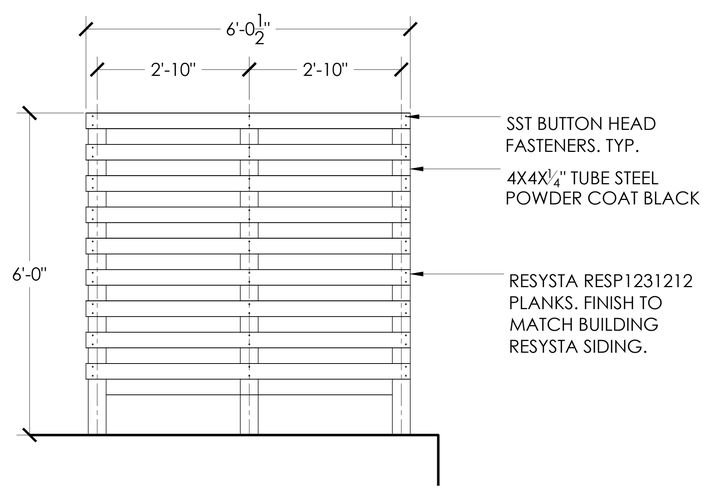

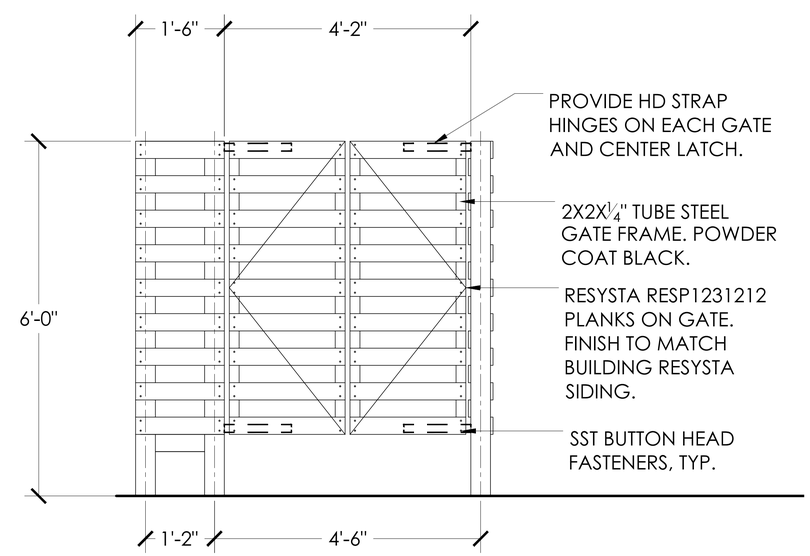

DESIGN FIRM:
Ndengu Design, LLC.
1 Avenue C - Suite 100
Hudson City,Bayonne County,
New Jersey 07002-3620
T:(000) 000-0000
F: (000) 000-0000
E: info@ndengudesign.com
W: ndengudesign.com

CLIENT:
Buyachi Ndengu Properties, LLC.
1 Avenue C - Suite 600
Hudson City, Bayonne County,
New Jersey 07002-3620
Tel:(973) 668-6440
Fax: (000) 000-0000
E:info@ndengu.com
W: ndengudesign.com

PROJECT:
Crossing Coffee
&
Tea House
1010 9th Street
Hudson Crossing
Hudson City, Bayonne County,
New Jersey 07002-3620

CONSULTANT:

CONSULTANT:

Notice:
Do not scale drawings.
Contractor is responsible for verifying dimensions and details in the field. Report any discrepancies.

SITE PLAN:

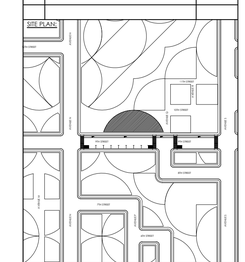

Seal:

Scale:
Drawn By: BN
Date: 00/00/00
Checked By:

ENLARGED SERVICE YARD

Project No.
12002.00
DWG File Name
A-103.00.dwg

A103.01
Sheet - of Sheets

Copyright © 2020 by NdenguDesign
All Rights Reserved